Parts & Hardware List

PARTS LIST			Qty
A		Case Top	1 PC
B		Case Leg	2 PCS
c		Case Leg	2 PCS

HARDWARE LIST			QTY
1	BOLT	5/16"*2-1/4"	8 PCS
2	LOCK WASHER	5/16"	8 PCS
3	FLAT WASHER	5/16"	8 PCS
4	WRENCH	87*12mm	1 PC

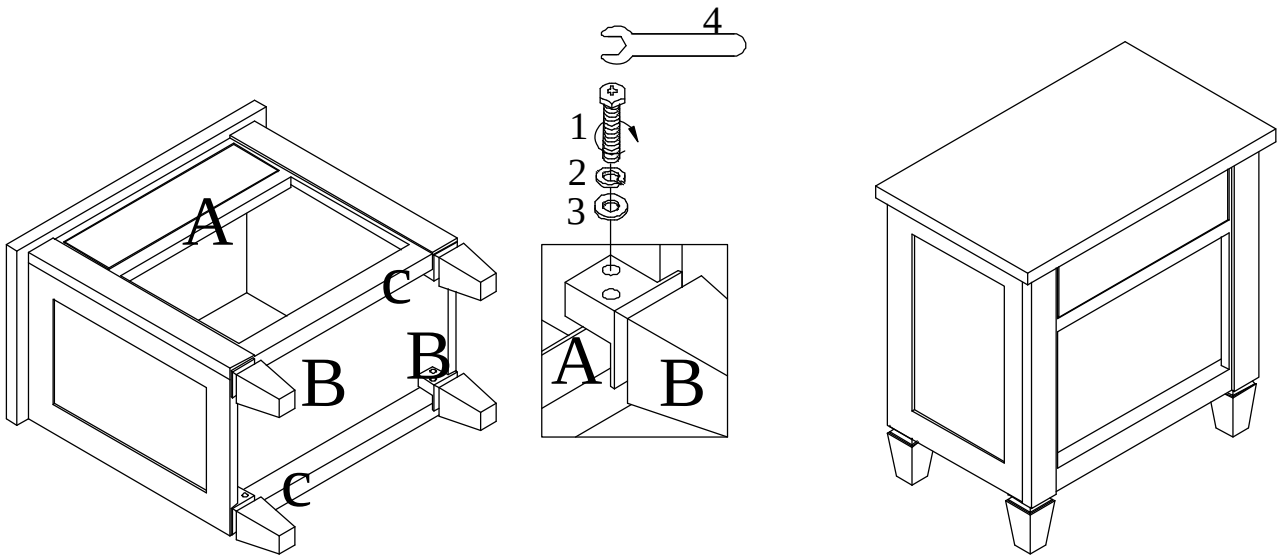

Assembly Procedures:

Step 1: Lay out all parts and hardware. Make sure the quantity of each is correct.

Step 2: Rest the case back (A) down onto a clean and soft, flat surface such as a blanket and ensure that the surface is clear of any objects that could scratch or damage the top. Attach the leg (B and C) to the case with hardware provided.

Step 3: Turn the unit upright. Assembly is complete.